To secure the internal network while keeping the public website accessible, we will place the web server in a demilitarized zone (DMZ). The internal network should be segmented with VLANs to separate departments and servers (accounting, sales, application, database, file, and print servers, etc.), preventing unauthorized access across all VLANs in the case of a breach. The border firewall should allow internet access but block any requests to internal addresses, permitting only necessary traffic, such as ports 80/443 for web access. It should also perform deep packet inspection for threat detection and logging for future review. An internal firewall should control traffic between the DMZ and internal network, also inspecting packets for malware and policy violations. An IDS/IPS between the internal firewall and network will monitor for attack signatures, anomalies, and prevent malicious activity, providing layered security.

Physical Topology

Public Facing Network

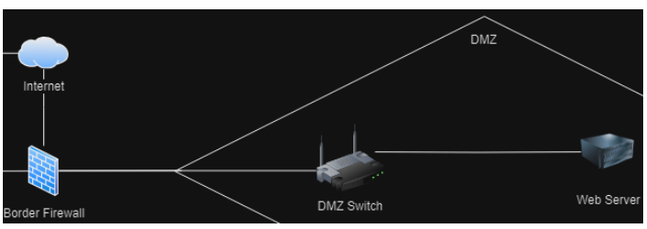

All Internet traffic goes through the border firewall, which filters and controls all traffic between the internet and the internal network. The web server that resides in the DMZ and is publicly accessible through HTTP/HTTPS traffic is controlled by the firewall.

Internal Network

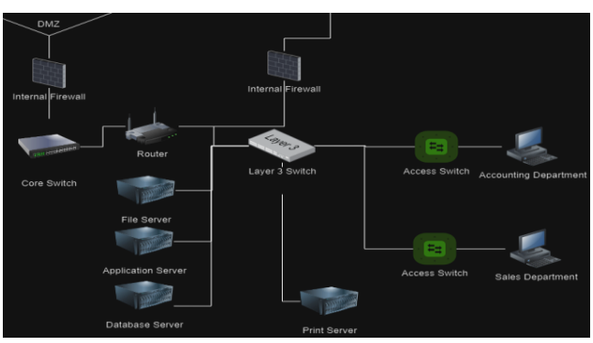

The internal network's physical topology features an internal firewall behind the DMZ to filter and monitor external traffic. After passing through the firewall, traffic reaches the core switch connected to the internal network router, which handles traffic entering or leaving the network. The layer 3 switch connects segmented VLANs, enabling communication between them. Layer 2 (access) switches allow both departments to access shared servers and communicate with each other. A second internal firewall controls traffic from the internal network to the DMZ, ensuring secure access to web server resources.

Logical Topology

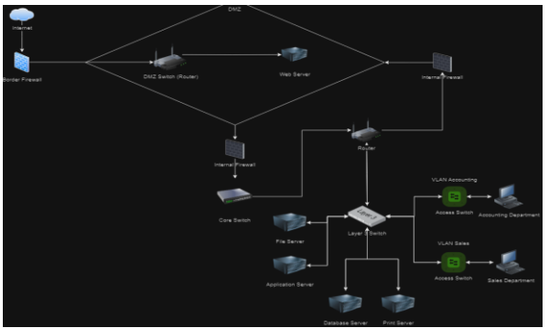

The network topology consists of an external network with internet traffic passing through a border firewall to access the web server or be denied. An internal firewall controls traffic to the internal network. After passing through the firewall, traffic goes through a router and layer 3 switch, which routes traffic to both VLANs and servers. Requests for DMZ resources pass through the access switch, layer 3 switch, router, and a second internal firewall before reaching the DMZ and returning through the first firewall. The internal router uses NAT to hide internal IP addresses when accessing external content.

Redundancy Plan

Redundancy is key in network design. To ensure reliability, several techniques can be implemented:

1. **Dual Links**: Connecting critical components like core switches, servers, and file systems with dual links eliminates single points of failure.
2. **Dual Firewalls**: A secondary firewall takes over if the primary one fails, maintaining traffic flow.
3. **Link Aggregation**: Multiple physical connections are combined into one logical connection, ensuring continuous performance if one link fails.
4. **UPS (Uninterruptible Power Supply)**: Keeps servers running during power outages, with backup UPS for added redundancy.
5. **2-Stack Switch Setup**: Combines two switches into one logical unit, ensuring connectivity if one switch fails.
6. **Layer 3 Switches**: Provide load balancing and backup servers, improving traffic management and ensuring server availability if one switch fails
7. **Database replication**: Provide active synchronization between both servers and in the event of one database server failing the other can be used as a backup server.

Continuing with IPv4

IPv6 offers key benefits like built-in security and address space, but Corporation Techs doesn't state a significant network growth, making upgrading to IPv6 unnecessary for now. Transitioning to IPv6 is costly and complex, requiring replacement of devices and infrastructure, which needs careful planning. While IPv6's security features are valuable, they can be implemented with IPv4. IPv4 will continue to serve the corporation, and when devices eventually need replacing, that's the right time to begin a transition to IPv6.

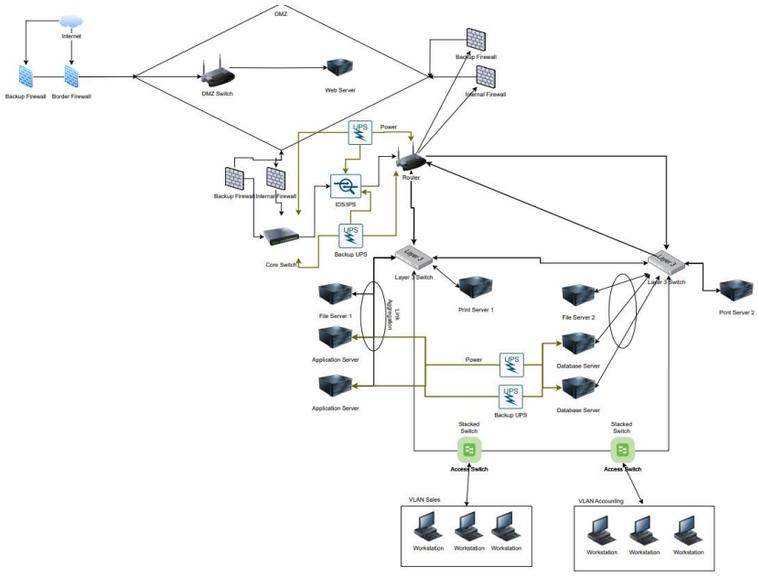

Draft Report

To: Senior Network Architect, Corporation Techs
From: Lorenzo Lore
Subject: Network Design

Objective

Based on the current network infrastructure and the requirements outlined by the senior network architect. The design addresses the following key aspects:

- Current infrastructure elements
- Public website availability
- Logical topology and departmental network separation
- Redundancy in communications
- Justification for continuing with IPv4

VLAN Segmentation

The proposed network design will utilize VLANs to separate the Accounting and Sales departments, as well as servers. Routing between VLANs will be managed by a Layer 3 switch, the Layer 3 device will facilitate the internal networks VLAN communications. To add on, the layer 3 switches will also act as a gateway for the internal network, as they are capable of having multiple gateways in a single switch allowing all subnets to communicate.

Redundancy

To ensure high availability, several redundancy mechanisms will be implemented. This includes Redundant Switches, Dual links, Load Balancing, Database replication, Backup firewalls, and a UPS with a backup UPS.

IPv4

For now, IPv4 is fine, as the existing network can operate within the limitations of IPv4. The transition to IPv6 will begin as the network expands and as the need for more IP addresses grows.

In conclusion, this report outlines the network design for Corporation Techs that includes logical network segmentation using VLANs to separate the Accounting and Sales departments. Redundancy in network infrastructure to ensure high availability, including redundant switches, firewalls, internet

connectivity, and servers. Lastly, a recommendation to continue using IPv4 while supporting IPv6 for future scalability.

Firewall Selection

Network Firewall

The Palo Alto PA Series NGFW is a next-generation firewall offering a wide range of security features in a single device. This hardware firewall is known for how easy it is to use while supplying complex capabilities, which include deep packet inspection, advanced threat detection, application awareness, threat intelligence, intrusion prevention, and SSL/TLS inspection. To add on, this firewall costs $1000 per year, in comparison to other solutions, it is a very cost-effective solution that also provides network security. This firewall was chosen for its ability to offer both security and affordability. The best place to place this firewall is on the perimeter of both the internal and external network so it can secure both the internal network and the web server within the DMZ. By being placed between the external network and the internal network, this firewall acts as the first line of defense for both. It will inspect incoming traffic, block malicious requests, and prevent unauthorized access to the internal network. To add on, placing a second internal firewall to inspect internal requests to the DMZ, helps prevent any threats from internal devices or systems. In addition, it can be configured to enforce access control policies between the internal network and DMZ, ensuring that even if a service is compromised, attackers are limited in their ability to move within the internal network.

Server Firewall

Windows Server

Windows Defender Firewall is a host-based firewall that comes with every Windows system. This firewall is pre-installed and already integrated with every version of Windows Server allowing easy customization and operation. To add on, this firewall provides reliable filtering for both inbound and outbound traffic, as well as the ability to create custom policies allowing only authorized traffic. This firewall would be configured on every server for maximum effectiveness and only allow specific traffic based on the server’s role.

Linux/Apache Server

Firewalld is a host-based firewall that is available for Linux distributions, Firewalld has many configuration options and security features. The reason I chose this firewall is because the web server runs on Linux and firewalld provides an easy-to-use interface for configuring both simple and complex firewall rules on Linux. Additionally, firewalld allows you to segment traffic that interacts with the server, this can be extremely helpful as both the internal and external networks will be accessing this server. Having this option allows for even more customization on which traffic can be trusted or not trusted. As the web server is also using Apache firewalld allows us to only allow traffic on necessary ports (80/443), reducing the attack surface. This firewall will be most effective on the web

server as it will permit specific traffic, save a list of trusted networks, block specific IPs or subnets, and log denied packets.

Workstation Firewall

Windows Defender Firewall is a host-based firewall that comes built into all Windows editions. Exactly like our Windows servers, Windows Defender Firewall comes integrated with the Windows operating system allowing for seamless operation. Additionally, it has advanced configuration and customizable rules for both inbound and outbound traffic. I chose this firewall because it is free, compatible with all workstations, easy to use, has seamless operation, doesn't need third-party tools, and can defend against external threats, unauthorized access, or traffic used by malware. This firewall is best positioned on every single workstation, this would allow for each workstation to be configured with the appropriate rules to defend against malicious traffic.

Creating DMZ

1. **External Firewall (Between Internet and DMZ):** Protects DMZ from the Internet and prevents direct requests to the internal network. External Firework should be configured to only accept traffic on port 80/443 as the only server within DMZ is a web server.
2. **DMZ Switch:** Placed within the designated DMZ and separates traffic from the internet to the web server. Similar to an internal switch that diverts traffic to an internal server, a DMZ switch will make sure all internet traffic is directed to our web server.
3. **Internal Firewall (Between DMZ and Internal Network):** Prevents any communication from DMZ to the internal network without authorization. This internal firewall protects the internal network from malicious requests/traffic that may have gotten through the DMZ and to the internal network.
4. **Monitoring and Logging:** All firewalls should be configured to monitor all traffic and log or notify administrators of any suspicious traffic, addresses, or requests.

DMZ Security Advantages

- The DMZ separates the web server from the internal network; by separating the publicly available web server from the internal network it makes it much more difficult for attackers to gain access to the internal network, even if the web server is breached.
- The DMZ adds a layer of security between the internet and the internal network. As shown in the network design, attackers must navigate through a variety of security measures that have been implemented before they can access the internal network, reducing the chances of a breach. Basically, creating a buffer zone in between the internet and internal network.
- The DMZ enforces access control using a variety of technologies, making sure that all traffic is thoroughly monitored, logged, and scanned for potential threats. This is actively enforcing

network policies to make sure that any traffic that goes through a security measure is meant to pass through.

Increasing Security Of Network Authentication

Multi-factor authentication (MFA): In addition to a username and password, there should be a requirement for some sort of challenge. In the case of Corporation Techs, an employee's phone can be used, or a company-issued token can be granted. This will add a layer of login security by requiring a time-sensitive code that is randomly generated. This would reduce the risk of unauthorized access even if the password is compromised.

Active Directory: Since all workstations and all internal network servers run on Windows, we can implement Active Directory to manage users, groups, and policies. Active Directory allows us to define permissions and enforce what users can access based on their role, group or policy. By implementing MFA, we can increase security even more by verifying a user's identity before granting permission. This makes sure that only authenticated users who proved their identity can access specific resources, adding a layer of security.

Strong Password Policy: A strong password policy should be mandated to make it more difficult for attackers to crack user passwords. This includes setting an expiration date for passwords, which requires employees to reset them regularly. The policy should also require criteria for making a strong password, this includes a minimum length, a mix of uppercase letters, numbers, and symbols.

Draft Report

To: Senior Network Architect, Corporation Techs
From: Lorenzo Lore
Subject: Firewall Selection and Placement

Objective

1. Research and select firewalls for the Corporation Techs network.
    a. Describe each firewall, why you selected it, and where it should be placed for maximum effectiveness.
    b. Address network, server, and workstation firewalls.
2. Describe a plan for creating a DMZ and explain how it makes the network more secure.
3. Research network authentication and create a high-level plan for secure authentication to internal network resources.

Network Firewall

The Palo Alto PA Series is a next-generation firewall that is easy to use and contains a variety of powerful security features. With deep packet inspection, application awareness, SSL/TLS inspection, and advanced threat detection, these firewalls placed on the perimeter of both our internal and external networks acting as the first line of defense will provide the necessary protection. Not only

does the Palo Alto PA Series contain a variety of important security features but it is also cost-effective. In comparison to other next-generation firewalls, the Palo Alto PA series is only priced at approximately $1000 per year.

Windows Server Firewall

Windows Defender Firewall is a built-in host-based firewall on all Windows Server editions. It provides reliable inbound and outbound traffic filtering and offers customizable rule sets. Since the majority of servers are running on Windows, using the built-in Windows Defender Firewall offers a no-cost solution. Each server will have customized traffic rules based on the server's specific role in the network.

Linux/Apache Server Firewall

Firewalld is a host-based firewall for Linux systems, with an easy-to-use interface and support for both complex and simple rule sets we will be able to implement a wide variety of configurations, this includes only accepting traffic on HTTPS/HTTP services (Port 80 and Port 443). To add on, Firewalld can segment traffic by trusted or untrusted sources providing us with an easier time with monitoring and configuration as we can make our internal network as a trusted source.

Workstation Firewall

Similar to the server implementation, Windows Defender Firewall will be placed on all workstations. It is already integrated into all Windows operating systems, providing basic and advanced firewall rules to defend against any external threats and unauthorized access.

External Firewall (Between Internet and DMZ):

Protects the DMZ from the Internet and prevents direct access to the internal network, only accepts HTTP/HTTPS traffic (Ports 80/443), which is required for the web server in the DMZ to accept connections.

DMZ Switch:

Directs traffic from the Internet to the web server within the DMZ. The DMZ switch ensures that Internet traffic is segmented and only routed to the web server.

Internal Firewall (Between DMZ and Internal Network):

Prevents unauthorized traffic from entering the internal network from the DMZ. This internal firewall will protect against any threat that might have made its way past the DMZ. It will also enforce access

control policies to ensure that only authorized communications are allowed from the DMZ to the internal network and vice versa for the second internal firewall.

Monitoring and Logging:

All firewalls should be configured to monitor and log network traffic. Alerts should be generated for any suspicious traffic patterns, IP addresses, or requests.

DMZ Security Advantages:

The DMZ will isolate the web server by separating it from the internal network, making it harder for attackers to access any internal resources. The DMZ will act as an additional layer of security as it forces attackers to breach multiple lines of defense before they can reach the internal network. And of course, all traffic to and from the DMZ is monitored, logged, and analyzed to ensure security.

Multi-Factor Authentication

Enhances security by requiring more than one factor of authentication in addition to a password. This would involve a time-sensitive code sent through a user's phone or company-issued token. MFA significantly reduces the likelihood of unauthorized access even if a password is compromised.

Active Directory

AD will be implemented to manage users, groups, and access policies. AD integrates seamlessly within a Windows-based environment and provides control over user permissions. In combination with MFA, we can verify identities of users and authorize users access to the correct resources based off roles, groups, and permissions.

Strong Password Policy

Enforcing a strong password policy includes requirements for password complexity and expiration. Various lengths, symbols, and numbers will make it more difficult for attackers to crack passwords. By setting a password requirement and required password changes, the ability for attackers to successfully log in will be greatly decreased.

VPN Solution

SSL/TLS VPN

An SSL/TLS VPN uses SSL/TLS protocols to secure communication between remote users and the internal network. This protocol is also the underlying security protocol for HTTPS. This is why SSL/TLS VPNs allow remote access to network resources through a standard web browser without requiring any additional client software.

Why SSL/TLS VPN is the Best Choice:

1. In comparison to IPSec VPNs, which typically require specific client software, SSL/TLS VPNs work with standard web browsers. This eliminates the need for installing additional software or configuring complicated settings on their devices, reducing the need for IT support.

2. SSL/TLS VPNs provide strong encryption and secure data transmission that protect against snooping. They also allow for more control over access based on user identity as they need to authenticate themselves through login and device characteristics.

3. SSL/TLS VPNs can provide access to specific applications, such as web-based applications or internal services, without exposing the entire network. In comparison, IPsec connects to the entire internal network. Using an SSL/TLS VPN minimizes the attack surface in the event of failure.

4. SSL/TLS VPNs can bypass most firewalls and NAT devices, making them suitable for our network environment, especially because we have various firewalls in place blocking specific traffic on certain ports. To add on, our router within the internal network is configured to use NAT as we want to hide internal addresses, through an SSL/TLS VPN we eliminate both these factors from blocking remote users and remove the need for complicated adjustments.

5. The SSL/TLS VPN solution is scalable and can easily expand with a growing number of remote users without needing to upgrade or make changes to the current network design.

Remote Access Options

Remote Desktop Protocol (RDP)

- RDP allows users to connect to a remote desktop session on a Windows workstation or server. It creates an encrypted channel between both devices and allows users to access files, software, and audio. It even allows full access to the desktop environment or server environment as if the user were physically at the machine.
- RDP is for users who need to work with specific applications that are only available on a specific desktop or server. It can be used with a VPN to add an additional layer

of security for accessing remote desktops. This would allow remote users to add additional security while accessing important resources on a server or workstation to accomplish their tasks.

Virtual Desktop Infrastructure (VDI)

- VDI provides a virtualized desktop environment that is hosted on a server or workstation. This will require configuration on a group of servers within our internal network. However, it allows users to connect to their desktop or server of choice through a secure gateway, allowing users to access resources and applications provided by the virtual machine.
- VDI would be useful as we can implement it within a group of servers, workstations, or even specific servers. This supplies a secure way of accessing resources as users will need to authenticate through MFA to establish a connection with the secure gateway configured. This secure gateway provides encryption on all data transmitted between the remote user and the server or workstation they established a connection with. Compared to RDP it can be used as a more secure, scalable solution.

Zero Trust Network Access (ZTNA)

- ZTNA technologies by default deny all network requests as access to applications or services is based on set access control policies. This means that Network administrators will need to configure permissions so that all users who authenticated themselves to ZTNA services are given access to the only resources they are granted to use/view. Once authenticated and granted permissions, users are provided remote access with an encrypted tunnel defending against snooping.
- ZTNA would be used to configure employees' access to specific servers, applications, and workstations. Not only does ZTNA provide secure access and authentication but adds a security layer by denying all remote access requests by default. Similar to a firewall, this means that any unauthenticated requests or users with no permissions are immediately dropped and will not enter the internal network.

Draft Report

To: Senior Network Architect, Corporation Techs

From: Lorenzo Lore

Subject: Remote Access and VPNs

Objective

1. Research and recommend the most appropriate VPN technology. The most likely solution is either an Internet Protocol Security (IPSec) VPN or SSL/TLS VPN. Describe the VPN technology and explain why it is the best choice for Corporation Techs.
2. Recommend any other forms of remote access that are relevant and describe how they would be used.

VPN Solution: SSL/TLS

Users will use an SSL/TLS VPN to access all required resources within the internal network. Thankfully, SSL/TLS VPNs do not require user-end configuration and all that is required on the user's end is a web browser. Once implemented, users will simply open their web browser, access a web portal, and they will be connected. During connection, all data that is being transmitted between remote users and our internal network is encrypted making sure snooping is not possible. To add on, we won't need to adjust any of the infrastructure in the internal network as this VPN will bypass any factors that would typically need adjusting, for example, the NAT address configured on our internal network router will not need to be readjusted as SSL/TLS VPNs bypass firewalls and NATs.

Remote Access Options (Other than VPN)

Remote Desktop Solution (RDP)

In combination with our VPN solution, RDP can be a secure option for remote users. RDP is a protocol that allows users to establish a session with the required workstation or server and access all necessary sources as if they were there in person. To establish a session remote users will need to authenticate their identity and Network Administrators will need to configure them on all servers and workstations within the internal network.

Virtualized Desktop Infrastructure (VDI)

VDI is implemented by network administrators on servers and workstations that need to be accessed by remote users. Once configured, remote users will establish a connection with a secure gateway configured on that server or workstation. Of course, to establish this connection remote users will

need to authenticate their identity. All data transmitted in this established connection are once again encrypted to prevent snooping.

Zero Network Trust Access (ZTNA)

Unlike RDP and VDI, ZTNA requires network administrators to configure permissions for remote users. This means that even if a remote user authenticates themselves, they will not be able to view or access resources unless they are explicitly granted access. This is because ZTNA goes by a deny-by-default methodology and requires users to both authenticate and have permission. Of course, this remote access method also provides an encryption tunnel that defends against snooping when a remote user establishes a connection.

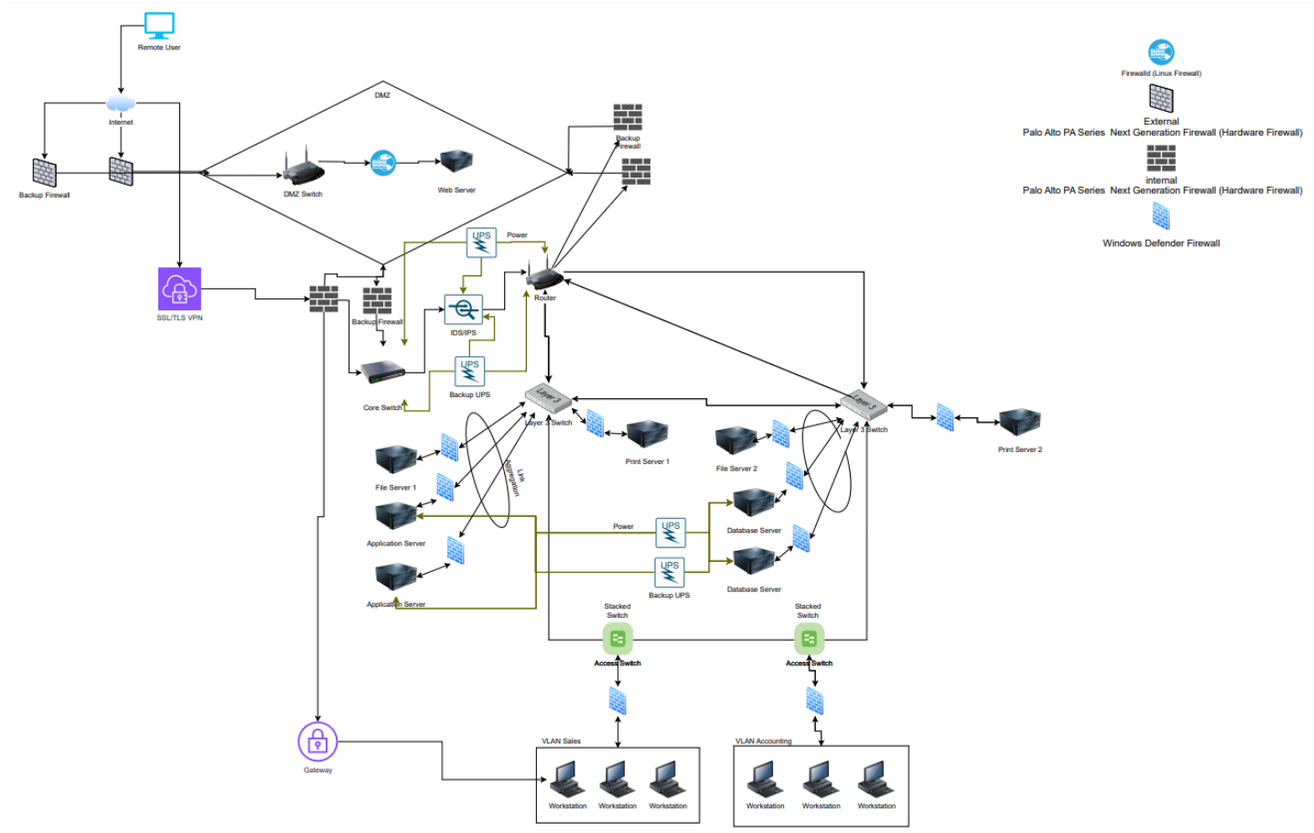

This report outlines the network design and security strategy for Corporation Techs. This network design aims at improving efficiency, scalability, and security within the company's IT infrastructure. The key elements of this design are network segmentation through VLANs, a 24/7 redundancy plan, a justification for IPv4, multiple layers of security, and remote access solutions for remote users to access the required resources within the internal network.

First, the proposed network design utilizes VLAN segmentation to separate the Accounting and Sales departments logically, rather than physically separating all the workstations or servers. This would not only improve security within our internal network by preventing unauthorized access from one department if breached but also optimizes traffic flow and reduces network congestion. The Layer 3 switches placed within the internal network will provide routing between VLANs and act as gateways, combining network resources and providing efficient communication between VLANs. To measure the success of this network enhancement we will need to monitor the performance of the network, this includes monitoring the amount of data that is being transmitted and delay in time in transferring data. To add on, network administrators will monitor security logs on our implemented security measures to track any suspicious activity and make sure that both departments are properly segmented.

Second, to ensure high availability and minimize downtime, I have created a redundancy plan. This plan includes a wide variety of strategies to make sure that our internal network is not affected by obstacles like power outages, device failure or connection failure. This includes dual switches, which are two physical switches that are logically read as one by other devices, this means if one switch fails the other will immediately take over. Another important strategy is having backup firewalls, this is

extremely important as we have various perimeter firewalls on both our DMZ and internal network, if one of the firewalls fails a second firewall that is routed the same will immediately take over and begin managing network traffic. This is extremely important because if there was no backup firewall and a firewall went out there would be a huge vulnerability. To keep power running in the case of a power outage there will be uninterruptible power supply (UPS) systems, this will keep essential servers and security measures running even in the event of an outage, there will also be a backup UPS in case the main UPS runs into trouble. These measures will guarantee business continuity during failures, with minimal service disruption. Link Aggregation, similar to stacked switches, will logically create one connection between multiple physical connections, this will make sure that performance continues even if one link fails and will improve performance as it will be using the best of its abilities. Load balancing will be done with two layer 3 switches, as mentioned in the first part of this report, layer 3 switches handle routing within our internal network, and having two layer 3 switches will allow us to split the handling of all network traffic between two switches improving performance. To add on, this will also provide fault tolerance as if one switch fails the other will take over. Dual links apply to only important components of the internal network infrastructure, this means using more than one link to connect this important component so that in case of a link failure it will continue working. Lastly, database replication will provide fault tolerance in the event of one of the database servers failing. By configuring database replication both database servers will mirror and update each other with the most up-to-date data. If one server fails, the other will still be running with accurate data. Performance will be measured by tracking the uptime and failure recovery times, which is the amount of time services are up and performing normally and the amount of time it takes to recover after a service/device goes down.

Third, continuing with IPv4 for the time being is the best option, the current network can operate within the limitations of IPv4. Replacing current network components can be costly and complex, this is why I believe that the transition to IPv6 should begin once components stop working and can be replaced with IPv6-compatible technology. All security features IPv6 has can be implemented within IPv4 for the time being until a full adoption of IPv6 is completed. To measure the success of continuing IPv4, there should be constant tracking of the progress of IPv6 adoption (How many devices are currently configured for IPv6) and monitoring IPv4 address usage to make sure there is enough for the current network infrastructure.

Fourth, a Palo Alto PA series next-generation hardware firewall will be implemented on the perimeter of both the DMZ and internal network. The hardware firewall placed on the perimeter of the DMZ will not only prevent malicious traffic from entering our web server but also prevent any requests from

being sent directly to the internal network. The hardware firewall on the perimeter of the internal network will make sure that any traffic entering the internal network is not malicious and inspect packets that are requested to go into the internal network. Another hardware firewall will be placed for traffic leaving the internal network to make sure no policies are being violated or traffic within the internal network is not compromised. All in all, these hardware firewalls have a plethora of security features that will keep both the DMZ and internal network secure. Additionally, a host-based firewall known as Firewalld will be configured on the actual web server; this firewall on top of the perimeter firewall will monitor packets and only allow traffic on ports 80/443. Thanks to Firewalld, network administrators will be able to mark the internal network as a trusted source of traffic to make monitoring traffic easier. Windows Defender firewalls will be configured on all internal servers and workstations as they all utilize a Windows operating system. This means that this is a no-cost solution providing outbound and inbound traffic filtering to defend against potentially malicious traffic. To measure success network administrators will monitor firewall logs to track if firewalls are performing the correct actions and tracking the number of incidents occurring, as well as how many were blocked/prevented.

Fifth, a demilitarized zone (DMZ) will be implemented by placing a Palo Alto PA series next-generation firewall on the perimeter of the DMZ and the internal network. In addition, a DMZ switch will be implemented in the DMZ to navigate all external traffic to the web server. Any requests that have gone through the DMZ and have reached the internal network will be viewed by the hardware firewall placed on the internal network perimeter. This firewall will use its security features to make sure that there is no malicious traffic and let traffic through. This format creates a buffer zone between the internet and the internal network by isolating the public web server, of course, all traffic will be scanned, filtered and viewed multiple times before touching the internal network. Additionally, all traffic going through the DMZ and toward the internal network will be monitored, logged, and scanned for additional checking by network administrators. Similar to firewall implementation, to measure the success of the DMZ, network administrators will need to monitor logs and track the success rate of the DMZ protecting the internal network.

Sixth, network authentication is an extremely important factor for our network infrastructure. As you may know, every service in the current era of technology recommends or requires more than one form of authentication. This is why I believe that multi-factor authentication is a must, and the username/password login is not enough. To implement multi-factor authentication into our network we would use employees' mobile phones or a company-issued token that generates a random time-sensitive code, this code will then need to be entered on the top of the usual login. To add a layer to

the usual login process, I believe that there should be a strong password policy. This policy would require a minimum length, symbols, and numbers to make cracking passwords extremely difficult. This will give attackers an even harder time as they not only need to get the user's time-sensitive code but crack a difficult password as well. Additionally, implementing Active Directory into our Windows environment would be seamless and give network administrators the ability to manage user access to resources based on permissions. These permissions will be configured based on the user's role, group, or company policy. This with the incorporation of multi-factor authentication will require users to authenticate themselves and based on their identity be given access to the required resources. Success will be measured based on employees' feedback on whether they can access the right resources and tracking how many people did not have an unknown login attempt.

Lastly, remote access is an important factor as many employees may be working outside of the physical location. For remote access, we will be using SSL/TLS VPNs as they do not require any special client software and can be used through any web browser. To add on, this VPN uses the SSL/TLS protocol which provides a secure encrypted tunnel once connected to the internal network, this would prevent any data that is being transmitted between the user and the internal network from being snooped on. Some more remote access options are RDP, VDI, and ZTNA. RDP is Remote Desktop Protocol, this protocol allows users to connect to a configured server or workstation and access it by logging in through their computer, once logged in its as if they were there in person, in combination with our VPN, this is a great option. VDI is Virtualized Desktop Infrastructure, this is configured by a network administrator by configuring a secure VDI gateway on the server or workstation necessary. Once configured, all the user needs to do is establish a connection with the gateway and authenticate themselves. Once authenticated a secure connection is established and all resources are accessible. Finally, ZTNA or Zero Trust Network Access denies all requests to the internal network by default. Users will first need to authenticate themselves and establish a connection with ZTNA technologies, after a connection is established, ZTNA will check if you have permissions and grant you a connection to resources you have permissions for. This of course requires configuration by network administrators as they will need to grant the proper permissions. The connection established is encrypted to prevent snooping of any kind. To measure the success of these enhancements, user satisfaction will need to be maintained/tracked, and access logs should be monitored to make sure no unauthorized remote access requests were attempted.

Citations:

Designing Smart & Reliable Networks. (2020). https://www.cisco.com/c/dam/global/en_ae/training-events/pdfs/designing-smart-and-reliable-networks.pdf

Introducing Network Design Concepts Objectives. (n.d.). https://www.pearsonhighered.com/assets/samplechapter/1/5/8/7/1587132125.pdf

Netgear. (2019). *What is link aggregation and LACP and how can I use them in my network? | Answer | NETGEAR Support*. Netgear.com. https://kb.netgear.com/000051185/What-are-link-aggregation-and-LACP-and-how-can-I-use-them-in-my-network

Cisco. (n.d.). *Configuring VLANs*. Cisco. https://www.cisco.com/c/en/us/td/docs/switches/datacenter/sw/5_x/nx-os/layer2/configuration/guide/Cisco_Nexus_7000_Series_NX-OS_Layer_2_Switching_Configuration_Guide_Release_5-x_chapter4.html

Palo Alto Networks. (2024). *Global Cybersecurity Leader - Palo Alto Networks*. Www.paloaltonetworks.com. https://www.paloaltonetworks.com/

Install Apache Web Server and Perform the Initial Firewall Configuration. (n.d.). Www.pluralsight.com. https://www.pluralsight.com/cloud-guru/labs/aws/install-apache-web-server-and-perform-the-initial-firewall-configuration

Basan, M. (2021, January 28). *Top NGFW Vendors [2021]: Compare 5+ Solutions | eSecurity Planet*. ESecurityPlanet. https://www.esecurityplanet.com/products/top-ngfw/

Okeke, F. (2023, June 6). *How to Secure Your Network in 6 Simple Steps*. Enterprise Networking Planet. https://www.enterprisenetworkingplanet.com/security/how-to-secure-a-network/

Microsoft. (2022, October 5). *Active Directory security groups*. Learn.microsoft.com. https://learn.microsoft.com/en-us/windows-server/identity/ad-ds/manage/understand-security-groups

TLS VPN Protocol Overview | NordLayer Learn. (n.d.). Nordlayer.com.

https://nordlayer.com/learn/vpn/tls/

Syfuhs, S. (2020, September 9). *How Authentication Works when you use Remote Desktop*.

Mastodon. https://syfuhs.net/how-authentication-works-when-you-use-remote-desktop

What Is Remote Desktop Protocol (RDP)? - IT Glossary | SolarWinds. (n.d.). Www.solarwinds.com.

https://www.solarwinds.com/resources/it-glossary/remote-desktop-protocol

VDI vs. RDS: What's the Difference and How to Choose. (2022, March 31). Ace Cloud Hosting.

https://www.acecloudhosting.com/blog/vdi-vs-rds/

Secure Remote Access | Protect Remote Employees from Cyberthreats. (n.d.). Palo Alto Networks.

https://www.paloaltonetworks.com/cyberpedia/secure-remote-access-understand-how-to-protect-remote-employees

Phifer, L., & Burke, J. (2019, October). *Choosing between an SSL/TLS VPN vs. IPsec VPN*. SearchSecurity. https://www.techtarget.com/searchsecurity/feature/Tunnel-vision-Choosing-a-VPN-SSL-VPN-vs-IPSec-VPN